Polar Coding for Selector-less Resistive Memories

Marwen Zorgui, Mohammed E. Fouda, **Zhiying Wang**, Ahmed Eltawil, and Fadi Kurdahi

University of California, Irvine

Non-Volatile Memories Workshop, Mar 11, 2019

Agenda

- Varying Sneak Path in Resistive Memory
- Polar Codes for Varying Channels
- Application to Crossbar Arrays
- Conclusion

Emerging Memory Technologies

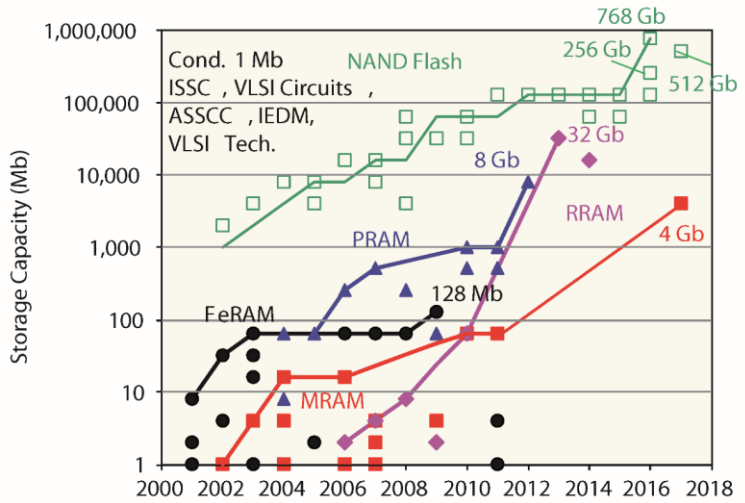

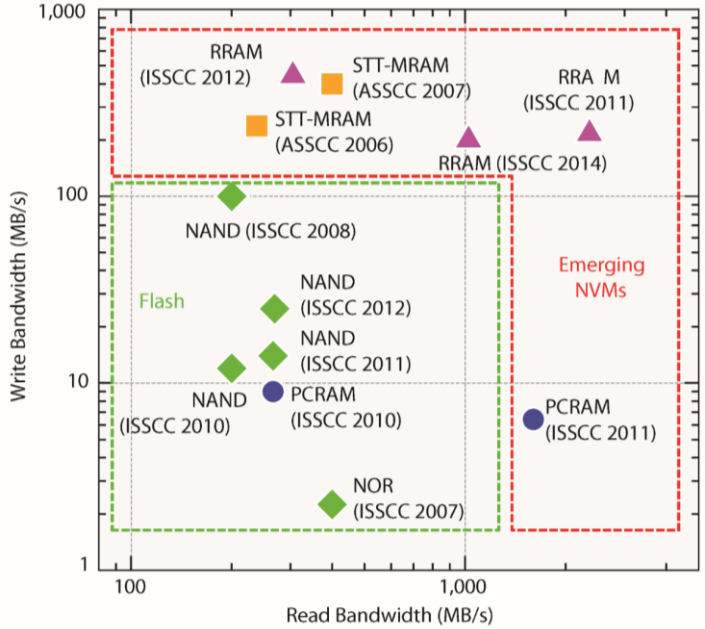

Parameter	FeRAM	STTRAM	PCRAM	ReRAM
Maturity	Product	Product	Product	Product
Feature Size	F>45nm	10n<F<45n	F< 10 nm	F< 10 nm
3D Integration	Difficult	Possible	Feasible	Feasible
Endurance	$< 10^{10}$	$>10^{10}$	$< 10^{5}$	$>10^{10}$
Retention	<10 years	<10 years	<10 years	>10 years
Latency	<100ns	<100ns	<100ns	$\leq 5ns$
Power	Low	Medium	Medium	Low
Variability	low	Reasonable	Reasonable	Reasonable

D. C. Daly and et al., “Through the looking glass–the 2017 edition: Trends in solid-state circuits from isscc,” IEEE Solid-State Circuits Magazine, 2017
S. Yu, P.Chen:” Emerging Memory Technologies” IEEE SOLID-STATE CIRCUITS MAGAZINE, 2016

Crossbar One-Step Reading

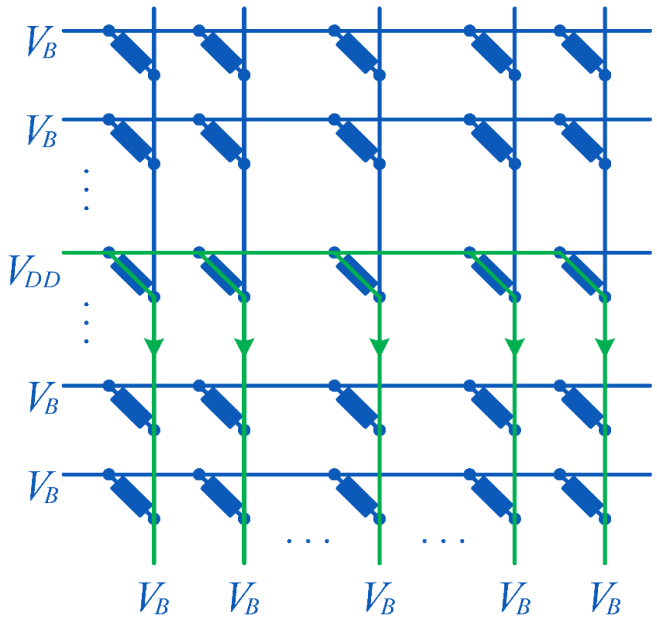

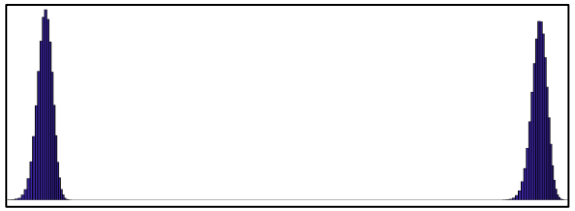

Fouda, et al. “On Resistive Memories: One Step Row Readout Technique and Sensing Circuitry”, arXiv:1903.01512

Sneak Path

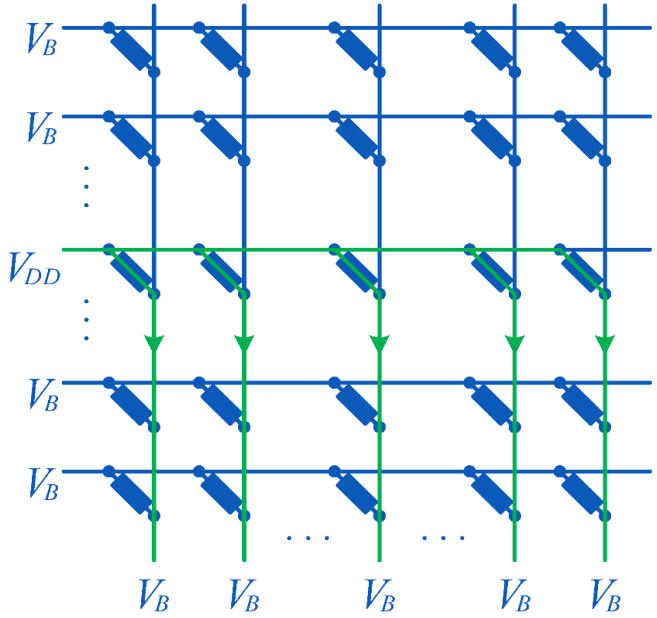

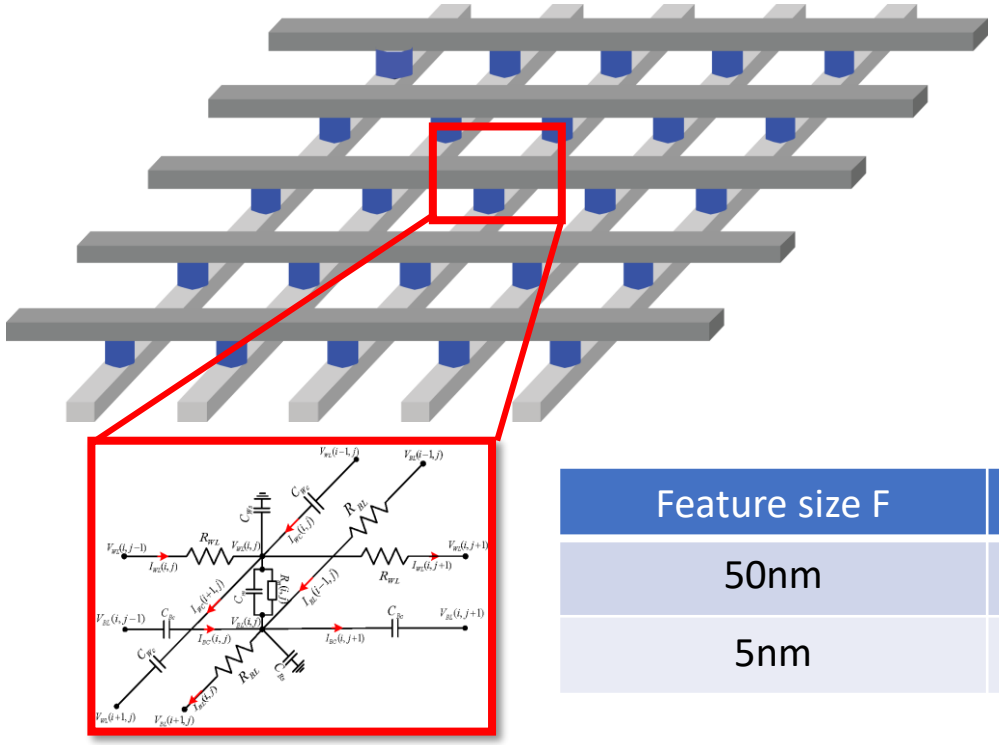

Feature size F	Wire resistance R_w
50nm	5Ω
5nm	90Ω

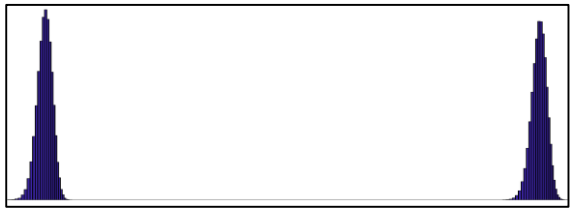

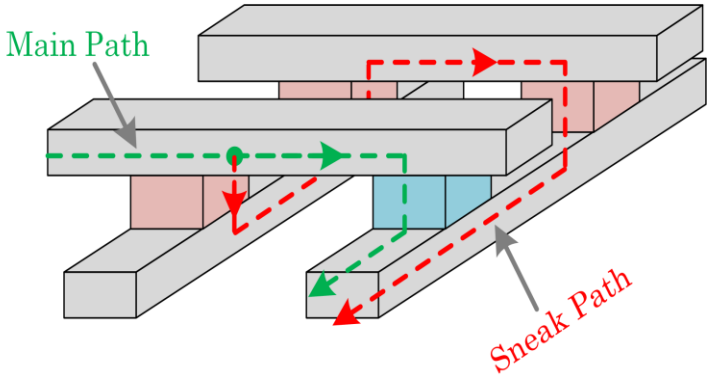

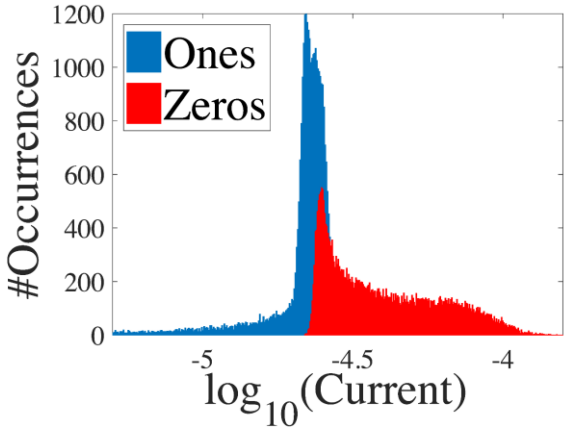

Fouda, et al. "On Resistive Memories: One Step Row Readout Technique and Sensing Circuitry", arXiv:1903.01512

Varying Sneak Path

$R_w = 30\Omega$

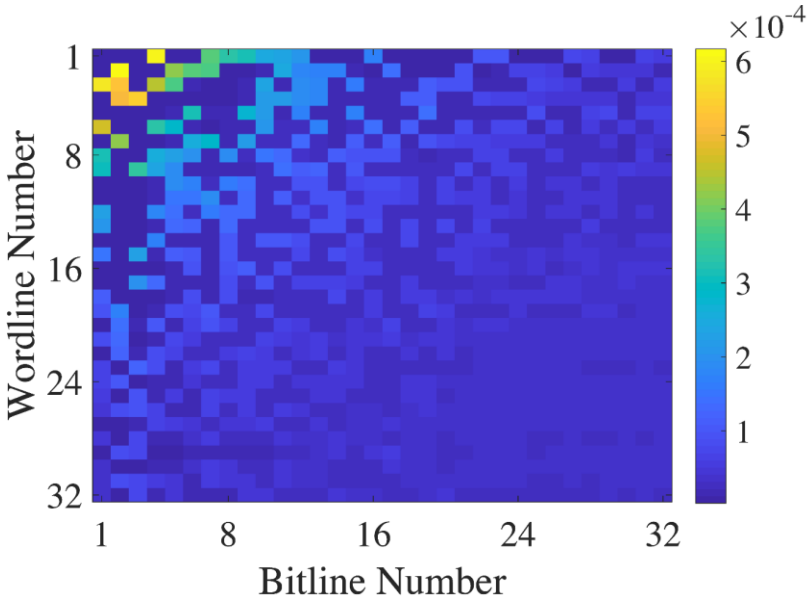

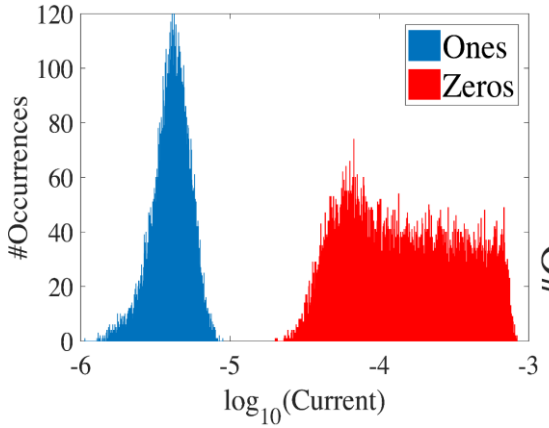

1st bitline

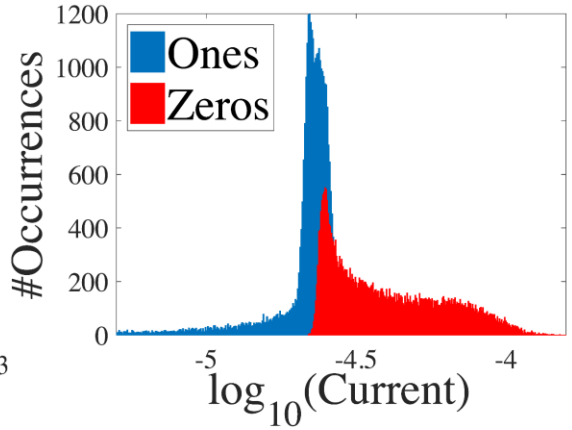

16th bitline

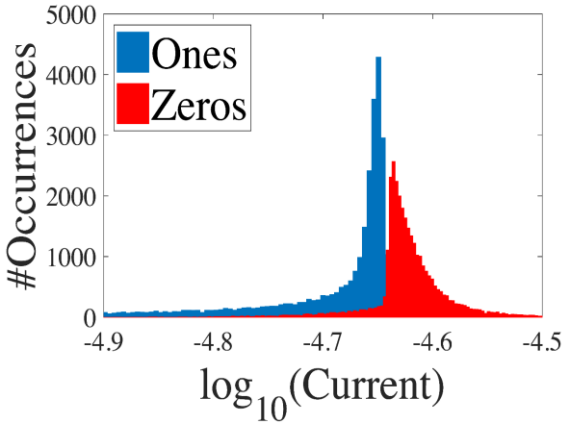

32nd bitline

Varying Channels

- Threshold per cell, per row, per column, or per array
- Training: Logistic regression-based
- => Binary symmetric channels (BSCs) with varying error probabilities

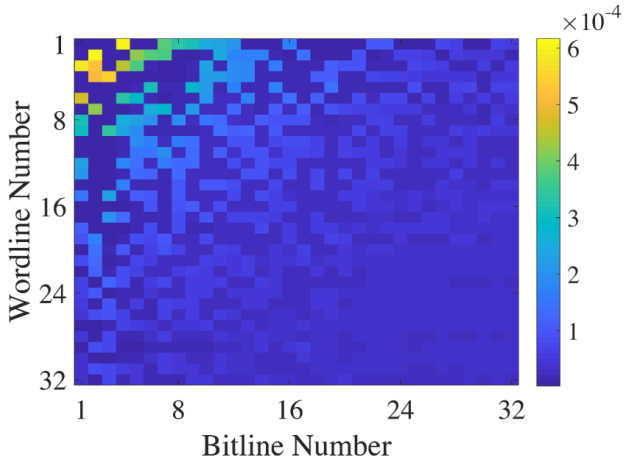

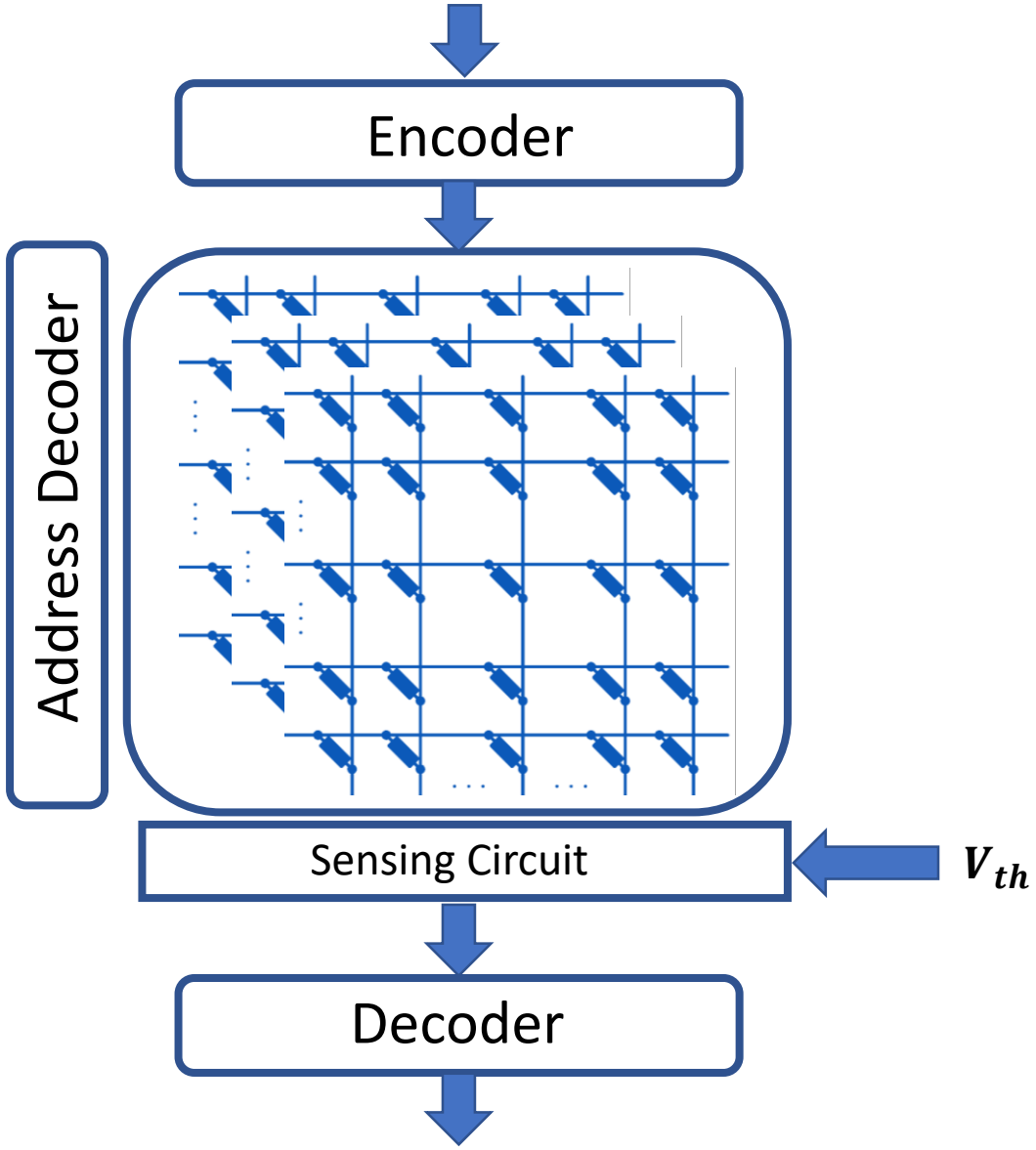

Polar Coding

- Low complexity encoding and decoding: O(N log N)
- Provably capacity-achieving
- Adaptable to different scenarios, including varying channels

Basic Polar Transformation & Properties

Channel combination

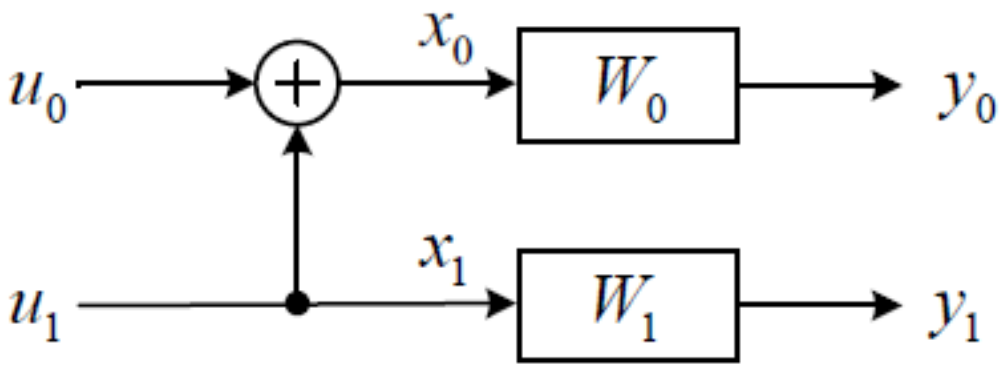

Channel splitting

$$W_0' : U_0 \to (Y_0, Y_1)$$
$$W_1' : U_1 \to (Y_0, Y_1, U_0)$$

Capacity conservation & Extremization

$$I(W_0') + I(W_1') = I(W_0) + I(W_1),$$
$$I(W_0') \leq I(W_i) \leq I(W_1'), i = 0, 1.$$

Arikan, Erdal. “Channel polarization: A method for constructing capacity-achieving codes for symmetric binary-input memoryless channels”, IEEE Trans. Inf. Theory. 2009

Recursive Application of Polar Transformation

Size 4 polar code construction

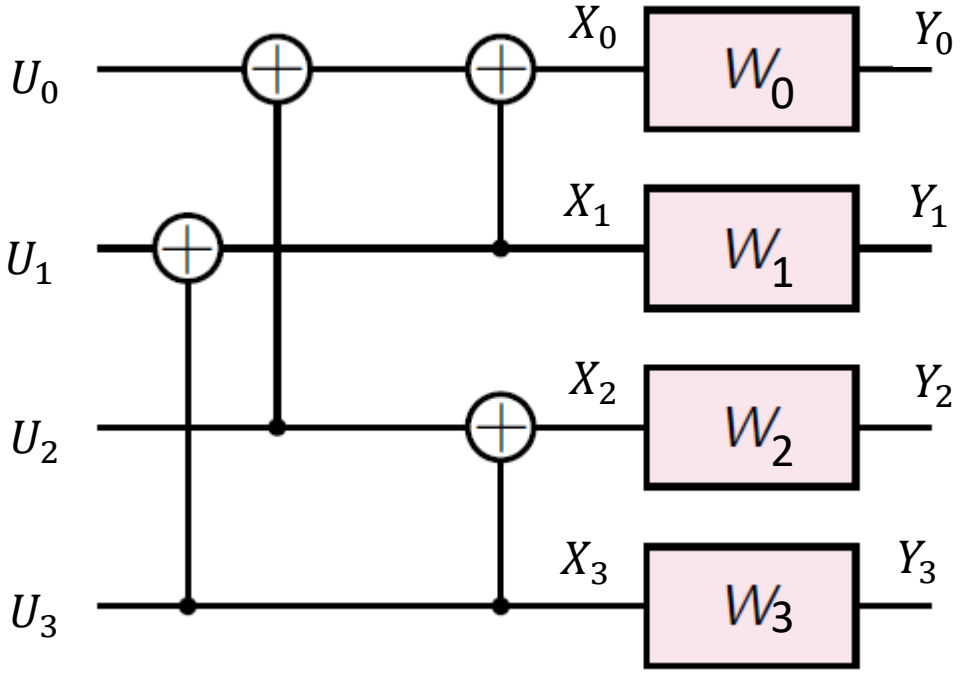

Size 8 polar code construction

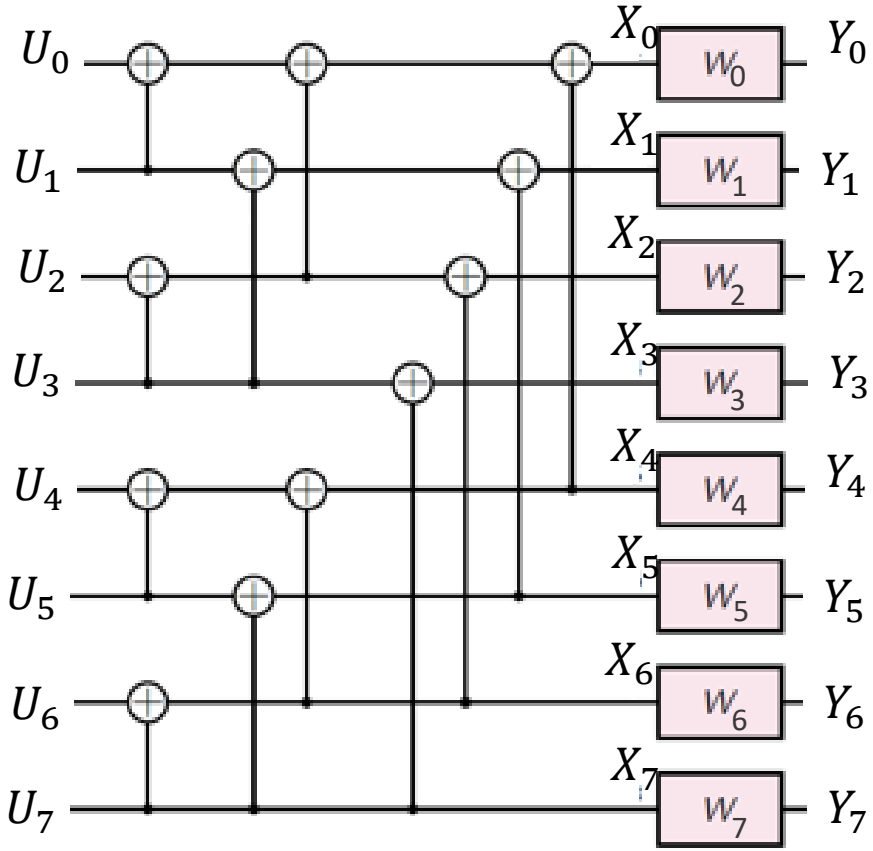

Systematic Polar Codes for Varying Channels

- We have N channels of different reliabilities
- Polarization theory extends to this setup [1]
- Fraction of good polarized channels approaches the average of the channels' capacities [2]
- Moreover, systematic codes have better empirical bit error rate (BER) [3]
- Question: Can we reorder the channels to get better BER?

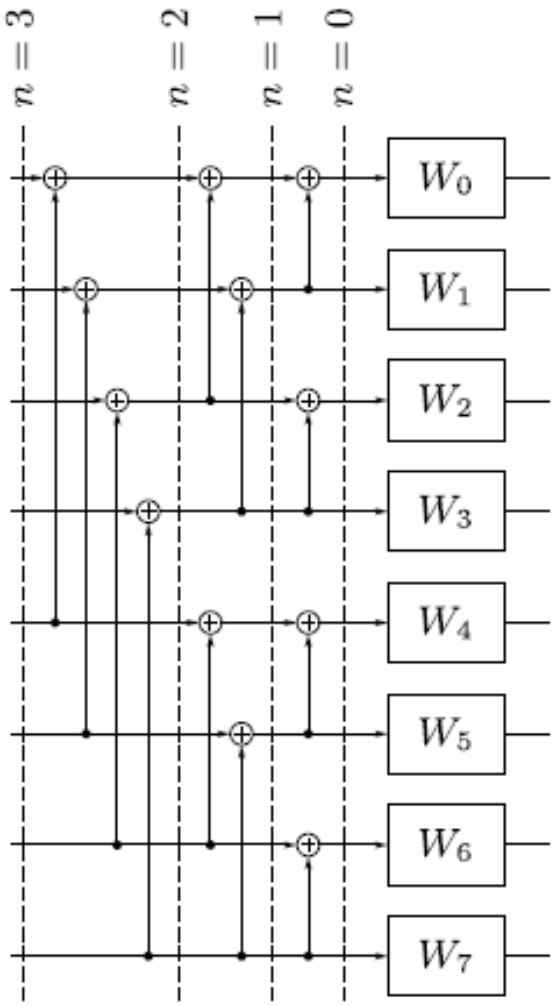

[1] Alsan, Mine and Telatar, Emre. "A simple proof of polarization and polarization for non-stationary memoryless channels", IEEE Trans. Inf. Theory. 2016
[2] Mahdavifar, Hessam. "Fast polarization for non-stationary channels", IEEE ISIT. 2017
[3] Arikan, Erdal. "Systematic polar coding." IEEE comm. letters, 2011.

Proposed Ordering of the Channels

- Assume the channels are such that $I(W_0) \leq I(W_1) \leq \cdots \leq I\left(W_{\{N-1\}}\right)$
- We propose the use of the bit-reversal permutation Ψ
- Example: $N = 8;\ \Psi = (0, 4, 2, 6, 1, 5, 3, 7)$

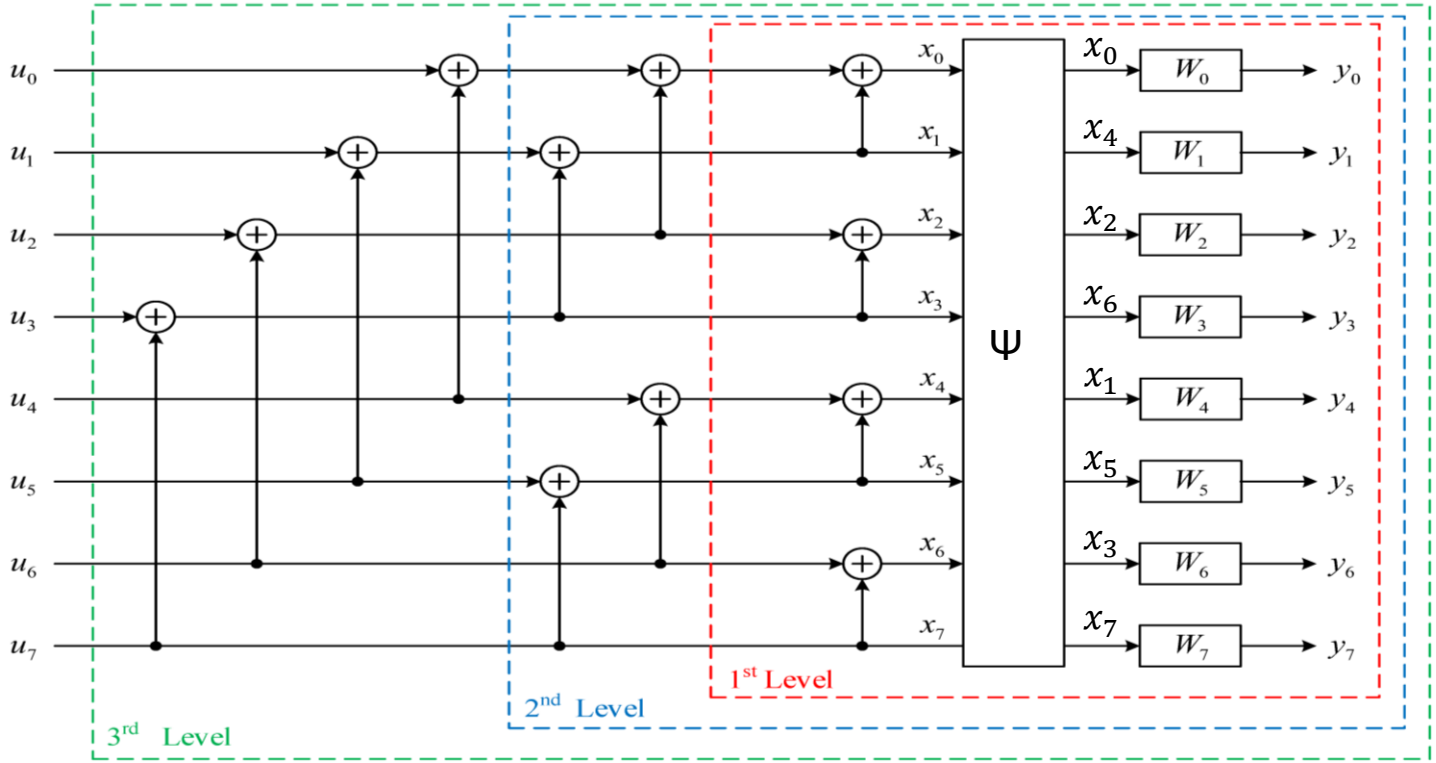

- Bit-reversal permutation has been proposed in the context of rate-compatible polar codes [1]

[1] Niu, Kai et.al. "Beyond turbo codes: Rate-compatible punctured polar codes", IEEE ICC. 2013

Example for Synthetic Channels

- Binary symmetric channels (BSCs).
- Raw BER (p) are linearly spaced with maximum deviation of 0.045.
- Bit-reversal permutation performs empirically good.
- Systematic encoding gain.

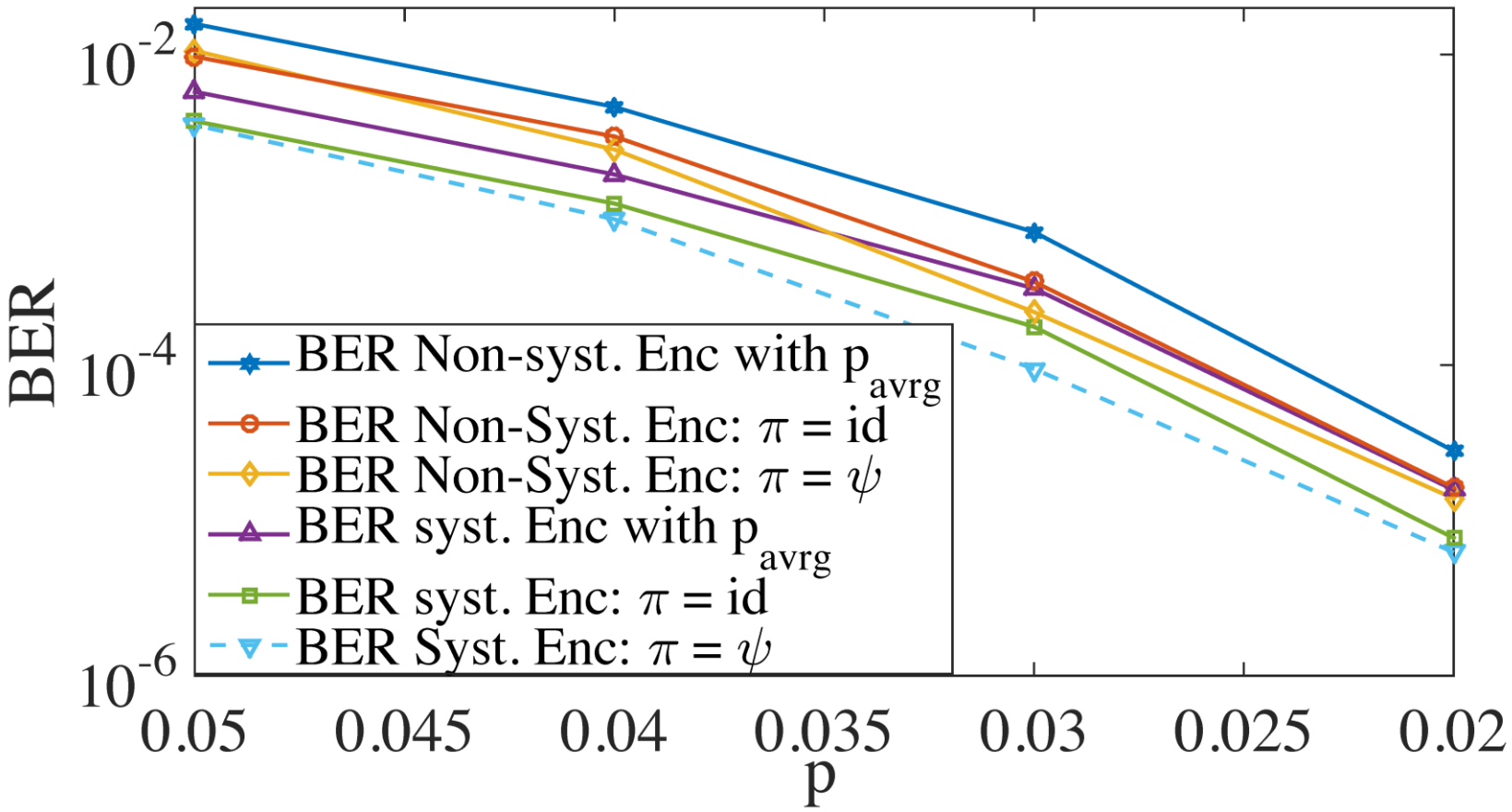

Rate = 0.5, N=1024

Application to the Crossbar Array

- Transform the read cells into BSC's:
  - Estimate a threshold for each row (wordline) by logistic regression
  - Estimate the raw BER for each cell
- Apply proposed polar codes with the estimated raw BER
  - Encode each row separately

Coding per Wordline

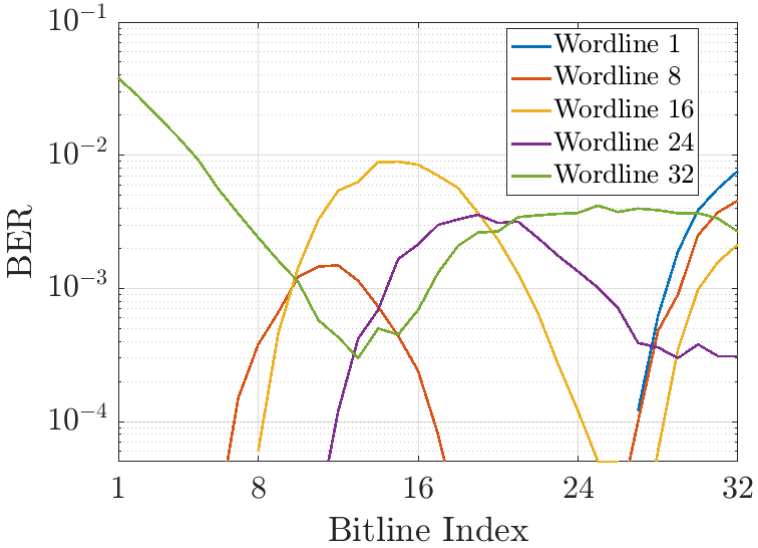

32×32 array,
$R = 0.5$,
$R_w = 30\Omega$,
$LRS = 1K\Omega$,
$\mathrm{HRS} = 1\mathrm{M}\Omega$

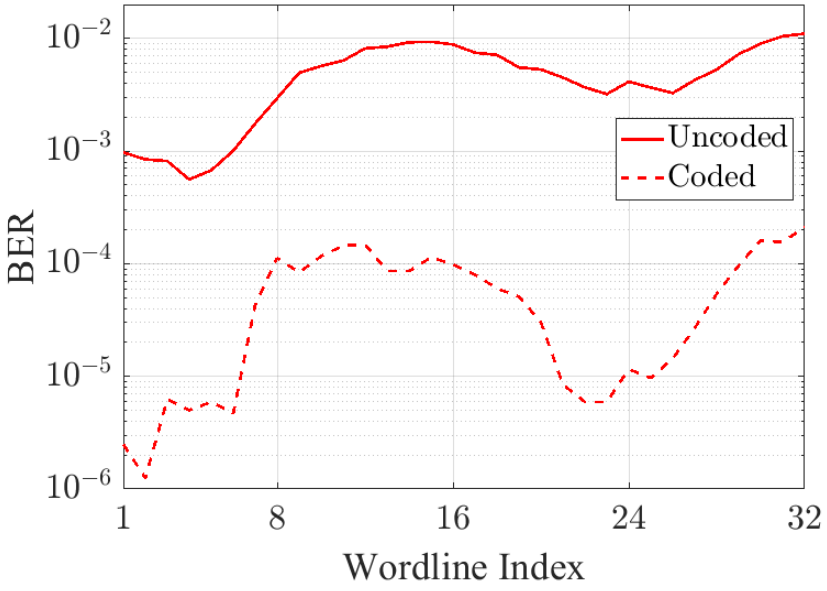

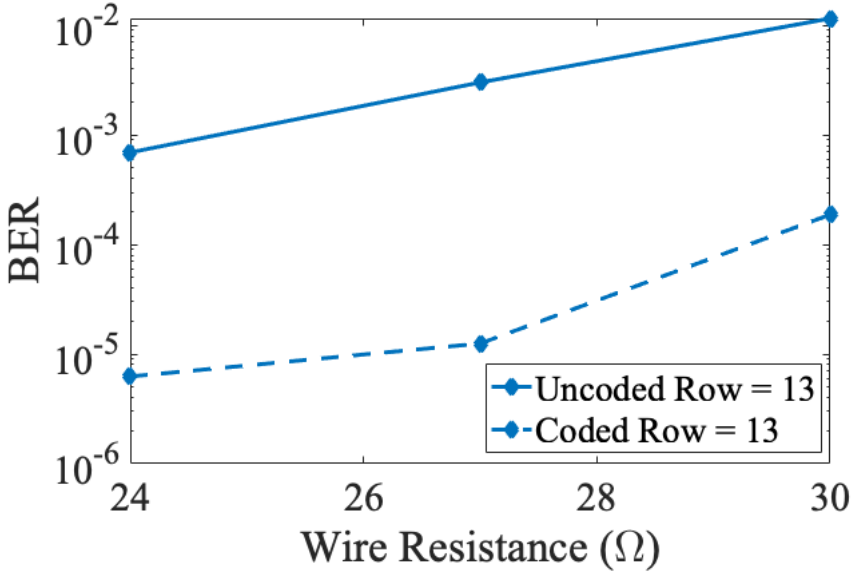

Conclusion and Future Work

- Applied polar codes to the sneak path problem in resistive arrays
- Proposed channel ordering method to improve the performance
- Enhanced performance compared to regular polar codes
- Future directions:
  - Modeling and soft-information decoding
  - Encoding the entire array for storage systems
  - Enhanced successive-cancellation list decoding